NOTE:
1. Material: SPCC
2. Thickness: 1.5mm
3. Appearance: Zinc plating
4. No sharp edges/ chips
5. Non-folded area remarked: Internal Radius 0.5
7. Edges/ chips location is as remarked on the drawing.

8. (A) - (C) are the major dimensions.

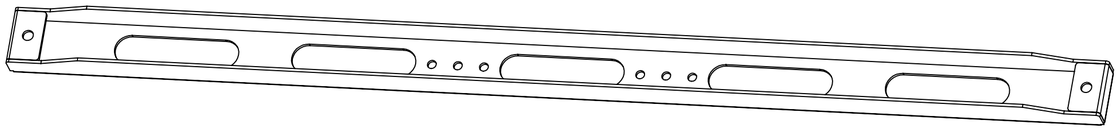

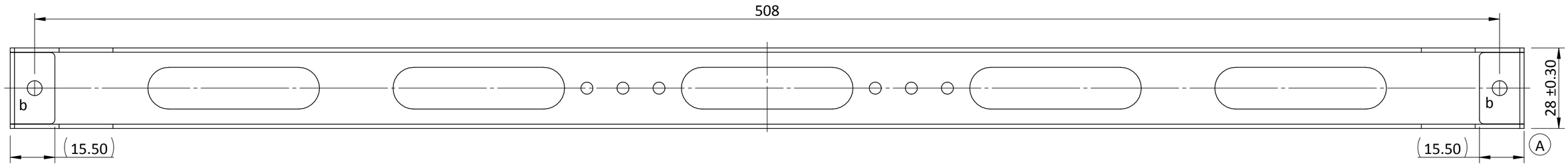

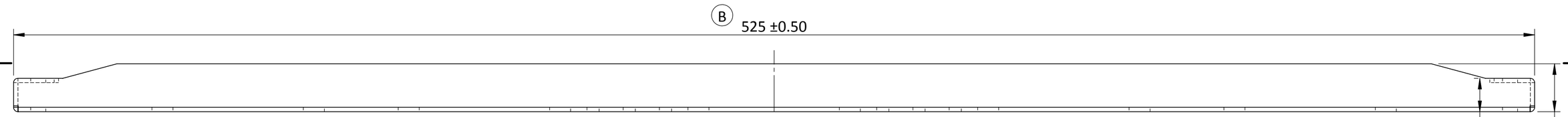

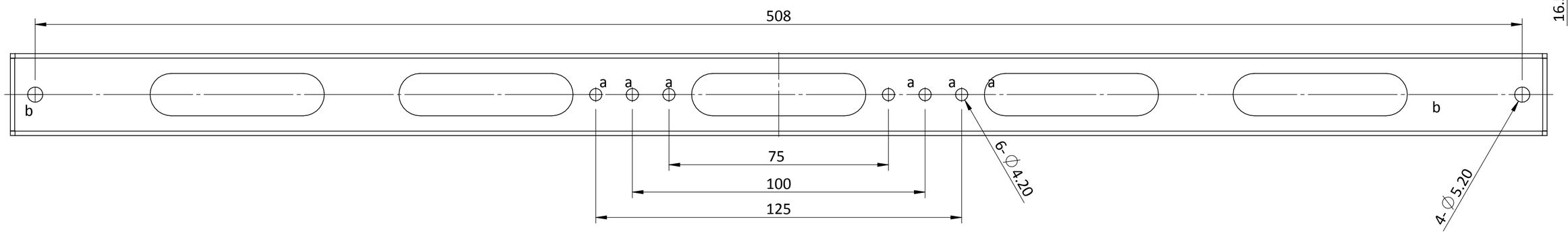

REV	DESCRIPTION	SIGN	DATE
5			
4			
3			
2			
1			

Note:
The componet should be comply with the prohibit of hazardous substances in the RoHs Directive.

RANGE (mm)	Common Tolerance
0~25	± 0.10
25~80	± 0.15
80~200	± 0.20
200~400	± 0.30
400~	± 0.40
ANGLE	± 1°

APPROV	Daisy Hsu	2017.03.30
CHECK	Shawn Kao	2017.03.30
DESIGN	Tom Lee	2017.03.30
DRAWN	Tom Lee	2017.03.30
UNIT:mm	SCALE:1:1	
	SIZE: A2	
FILE NO:	41114-1188C0-00-RS	

iEi.Integration Corp.

TITLE: Panel-mounting-bracket

MODEL: AFL3PK-W22C

PART NO: 41114-1188C0-00-RS