AFL3-W22C-ADLP

IEI Light Industrial Panel PC

Powered by Intel® Alder Lake-P

www.ieiworld.com

AFL3-W22C-ADLP

Fanless, high-performance Panel PC, supporting 12th Gen Intel® Core™ i7/i5/i3 processors, 8GB DDR4 memory, HDMI output, dual 2.5GbE LANs, IPMI remote management, three M.2 expansion slots, and an anti-glare, UV-resistant, 10-point capacitive touchscreen that is RoHS-compliant

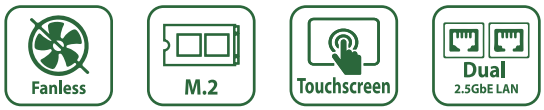

12th Gen Intel® Core™ Mobile Processors

The 12th Generation Intel® Core™ mobile processors feature a new Performance Hybrid Architecture that delivers superior performance and rich scaling for a superior experience.

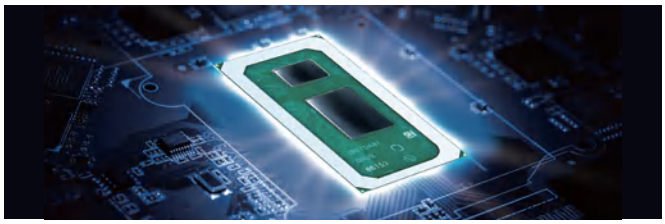

Support 4K UHD Display Output

10th generation Intel® Ultra HD graphics engine allows the system to display video and images in stunning 4K resolution over HDMI 1.4b

Anti-glare and Anti-UV PCAP

With anti-glare and anti-UV coating, the 10-point touchscreen can display clearly without reflection for a long time use in outdoors and bright light environment.

Support Wi-Fi 6E and Bluetooth 5.2

Strong Wi-Fi 6E wireless network capability provides more bandwidth, and the low latency Bluetooth 5.2 connection is more stable and consumes less power.

IPMI 2.0 Remote Management

By combining with IEI's iRIS expansion card, remote management over the network can be achieved, such as OS installation/ restoration, power on/off, and much more.

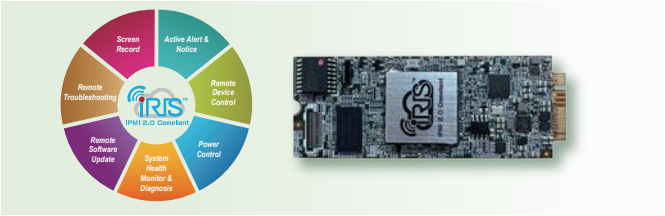

Dual Full-Speed M.2 Expansion Slots

Two M.2 M-key slots accept 2280 sizes of M.2 modules, and supports PCIe Gen4 x4 full-speed signal for more bandwidth and faster speed.

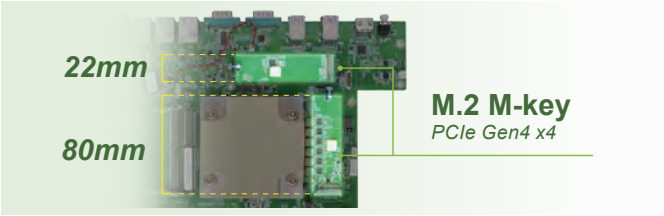

Fully Integrated I/O

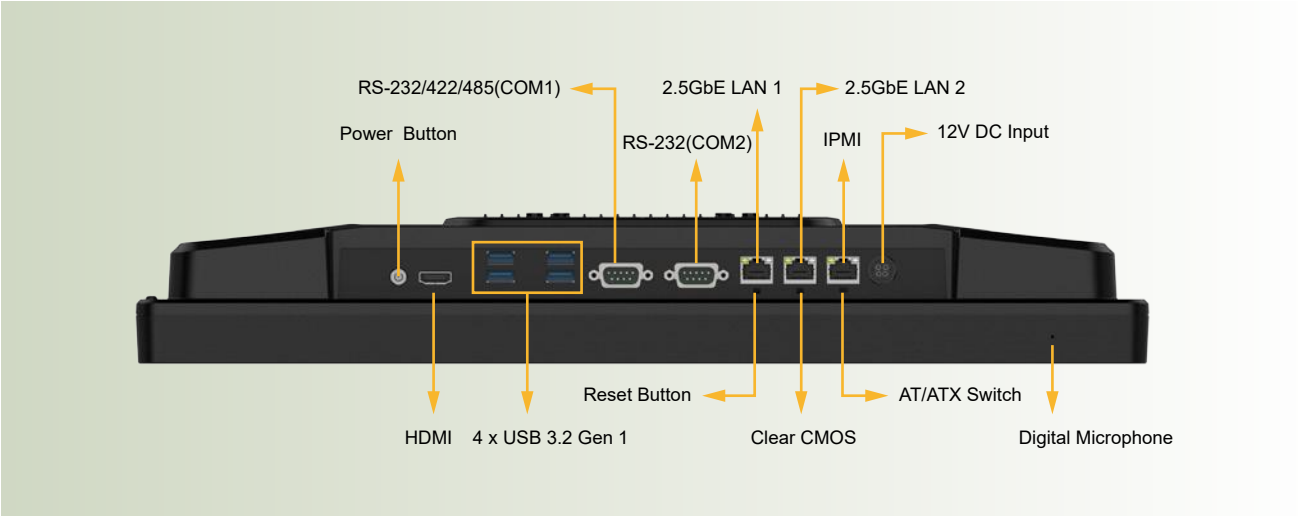

Block Diagram

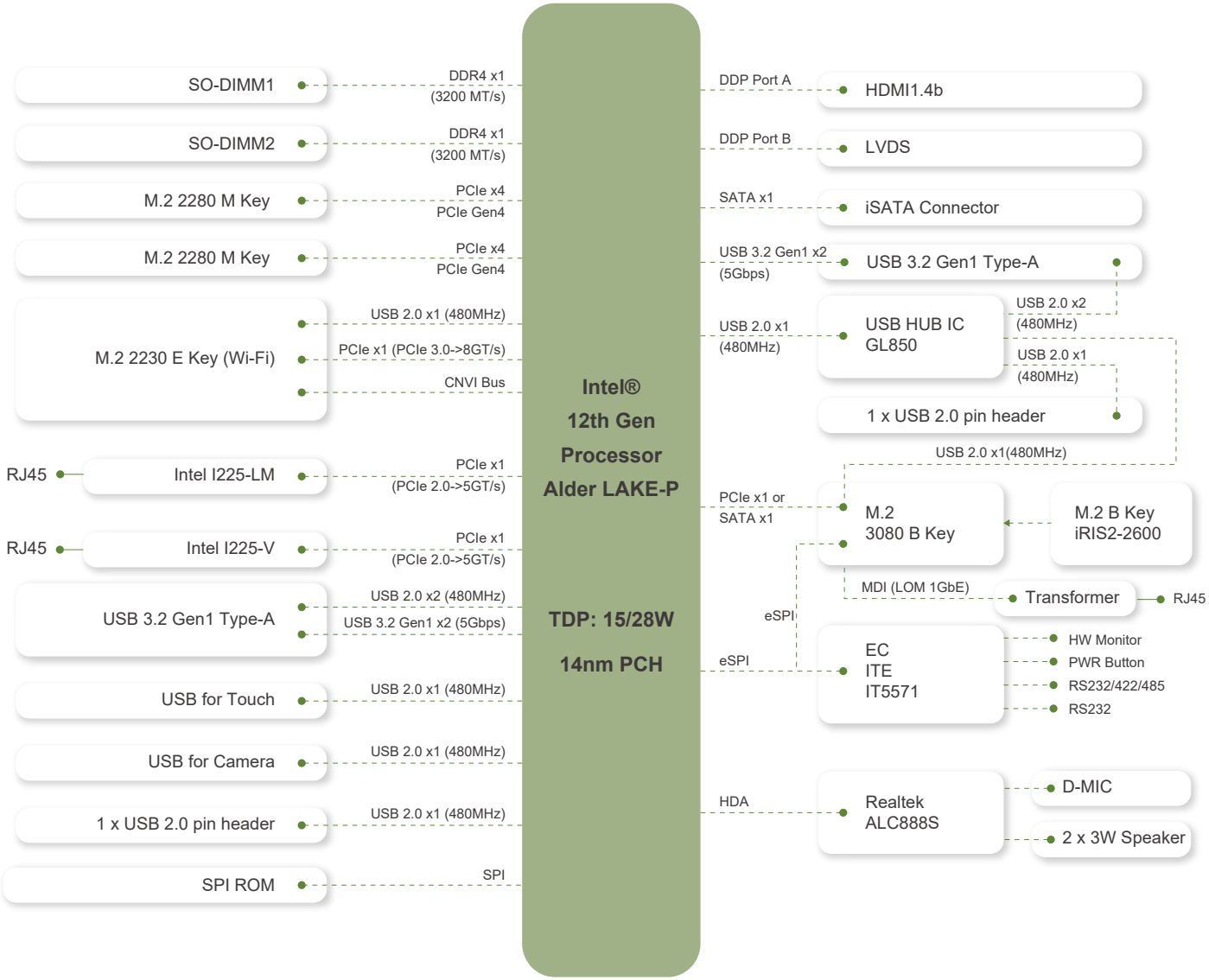

Dimensions (Unit: mm)

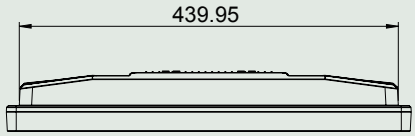

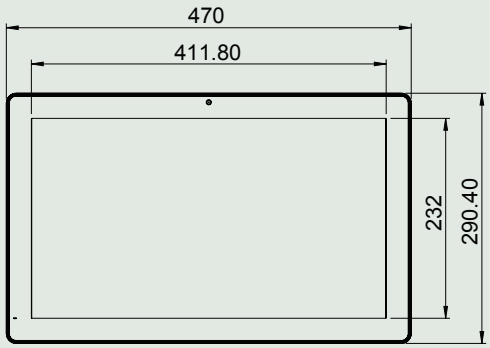

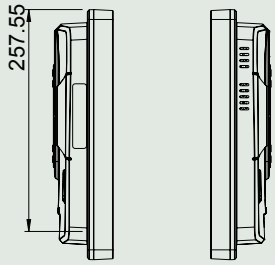

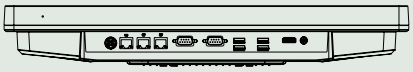

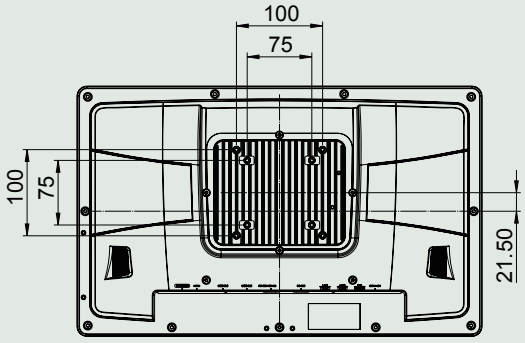

Specifications

Model		AFL3-W22C-ADLP
LCD	Size	21.5"
	Resolution	1920 x 1080 (16:10)
	Brightness (cd/m²)	350
	Contrast Ratio	1000
	Viewing Angle (H-V)	178/178
	Backlight MTBF	50000
Touch	Touch Screen	PCAP with USB interface (anti-UV/AG coating)
	Touch Controller	EXC3160
Mainboard	SOC	12th Gen Intel® Core™ Mobile i7/i5/i3 Processors (Alder Lake-P)
	RAM	Two 260-pin 3200 MHz dual-channel DDR4 SO-DIMM (8GB pre-installed) (max. 32GB)
	Ethernet	LAN1: Intel® I225 LM (support Intel AMT) + LAN2: Intel® I225V
	Audio Codec	ALC888S
	Storage	1 x 2.5" SATA 6Gb/s HDD bay
	Expansion	2 x M.2 2280 M-key (PCIe x4) 1 x M.2 3080 B-key (PCIe x1 or SATA) support IPMI function
	I/O Ports & Switch	1 x RS-232 by DB9 1 x RS-232/422/485 w/ AFC by DB9 2 x 2.5GbE LAN 1 x RJ45 for IPMI 4 x USB 3.2 Gen1 1 x HDMI output 1 x 12V DC jack 1 x Power button 1 x Reset button 1 x Clear CMOS button 1 x AT/ATX switch
Audio		AMP 3W + 3W (internal speaker)
Camera / Microphone		2-megapixel with low light function, digital microphone
Wireless & Bluetooth		IEEE 802.11ax 2T2R module (Wi-Fi 6E) with BT v5.2 (M.2 2230 E-key)
Physical	Construction Front Panel	PC + ABS Plastic
	Mounting	VESA 75 /100mm
	Color	Black C
Environment	Operating Temperature (°C) (Ambient with air flow)	0 ~ 50
	Storage Temperature (°C)	-20 ~ 60
	Humidity	10 ~ 90RH@40°C (non-condensing)
	IP Level	IP 64 compliant front panel
	Safety & EMC	CE, FCC (Class A) , UKCA
	Thermal	Fanless
Power	Power Requirement	12V DC
ErP		ErP 2009/125/EC
Supported OS		Microsoft Windows® 10/11 IoT, Linux

Packing List

1 x Power cord	1 x Screw pack
1 x Power adapter	1 x QIG

Ordering Information

Part No.	Description
AFL3-W22C-ADLP-i3/8G-R10	Wide 21.5" 350cd/m² 1920x1080 Panel PC with 12th Generation Intel® Core™ i3-1220P on-board processor, PCAP touch, 2M camera, microphone, 1x8GB DDR4 RAM, with AG, RoHS
AFL3-W22C-ADLP-i5/8G-R10	Wide 21.5" 350cd/m² 1920x1080 Panel PC with 12th Generation Intel® Core™ i5-1240Pon-board processor, PCAP touch, 2M camera, microphone, 1x8GB DDR4 RAM, with AG, RoHS
AFL3-W22C-ADLP-i7/8G-R10	Wide 21.5" 350cd/m² 1920x1080 Panel PC with 12th Generation Intel® Core™ i7-1260P on-board processor, PCAP touch, 2M camera, microphone, 1x8GB DDR4 RAM, with AG, RoHS

Options

Item	Part No
Wall mounting Kit	AFLWK-19B
Arm	ARM-11-RS
Stand	STAND-A21-R10/ STAND-210-R11/STAND-C19-R10
IPMI card	iRIS2-2600-R10